Role of UPFC in Power System

Abhishek Gandhar[1], Balwinder Singh[2], Rintu Khanna[3]
[1]*Ph.D, Research scholar, PEC University of Technology, Chandigarh, INDIA*
[2],[3]*PEC University of Technology, Chandigarh, INDIA*

Abstract: FACTS (Flexible AC Transmission Systems) means a whole family of controllers and devices for increase the purpose and flexibility of power systems. These controllers are installed in many places for improving the functionalities of power systems like voltage, impedance and phase angle of power systems. FACTS devices provide strategic benefits for improved transmission system management through better utilization of existing facilities; increased transmission system reliability, increased dynamic and transient stability and finally increased quality of supply. These devices offers most versatile and powerful solutions to various power system contingencies and has emerged best for the control and optimization of power flow in electrical power transmission systems. These controllers offer major potential advantages for the static and dynamic operation of transmission lines.

This paper presents a review of the most powerful FACTS device UPFC (Unified Power Flow Controller) as well as enumerates its benefits and its development story over the years. Further this paper describes the operation of the UPFC.

Keywords: FACTS, UPFC, STATCOM, SVC

1. INTRODUCTION

Nowadays power systems are huge, complex and interconnected systems which consist of thousand of buses and hundreds of generators [1],[2],[3]. New installations of power stations and other facilities are primarily determined based on various factors mainly on environmental and economic factors. In addition, Installing new transmission lines are very expensive and requires lot of time.. With these conditions, in order to meet ever-increasing load demands, electric utilities have to bank on power transmission facility through the existing transmission system and to design new methodology to enhance the power transmission capability of power systems .The expansion of power transfer capability of transmission systems has been a major problem over the past two decades Moreover, due to growing demands and limited resources.. FACTS devices [4] can be a solution to this problem. They are able to provide rapid active and reactive power compensations to power systems, and therefore can be used to provide voltage support and power flow control, increase transient stability and improve power oscillation damping. The recent development and use of FACTS controllers in power transmission system have led to many applications of these

controllers to provide operating flexibility to the power system. FACTS devices have been defined by the IEEE as "alternating current transmission system incorporating power electronic-based and other static controllers to enhance controllability and increase power transfer capability" [5][6].

FACTS technologies provide advanced solutions as cost-effective alternatives to new transmission line construction. The potential benefits of FACTS equipment are now widely recognized by the power systems engineering and T&D communities. . They all play an important role in the power system, for example, SVC (static VAR compensator)， STATCOM(Static compensator). The use of FACTS devices at present is bringing the users of high voltage transmission systems fresh opportunities as well as challenges. So far, it appears to be one of the most important alternatives to overcome both the inflexible condition of most of the power systems and the continuously growing demand of power, as construction of new high voltage transmission lines are in most of the cases either a non-viable solution or become viable after a certain period of time. As it is known, the association of a STATCOM (Static Compensator), which is a line shunt connected device with the line series connected SSSC (Static Synchronous Series Compensator) via their common dc Link &, results in the UPFC [7][8][9], which will combine the benefits of both components and thus reach a higher performance.

As the most representative member of the FACTS family, The Unified Power Flow Controller has more control variables, Compared with the other FACTS devices, it can change a variety of system parameters during operation, make the system running more flexible, Therefore, it becoming more and more valued. This paper provides a detail mode of UPFC considering the charging dynamics of its DC link capacitor for simulation, then simulated on a simple power system with UPFC basing on this detailed dynamic model, and the simulation results verified that the UPFC device can improve power system transient stability properly and effectively[10],[11] . This paper presents a clear analysis of a power system using very important facts controllers UPFC.

The paper is organized as follows:

- Section II presents a review of different FACTS controller.
- Section III presents a general configuration of UPFC.
- Section IV presents the technical benefits of FACTS controller
- Section V, here presents the survey results**.**

2. FACTS CONTROLLERS

When discussing the creation, movement, and utilization of electrical power, it can be separated into three areas, which traditionally determined the way in which electric utility companies had been organized. These are

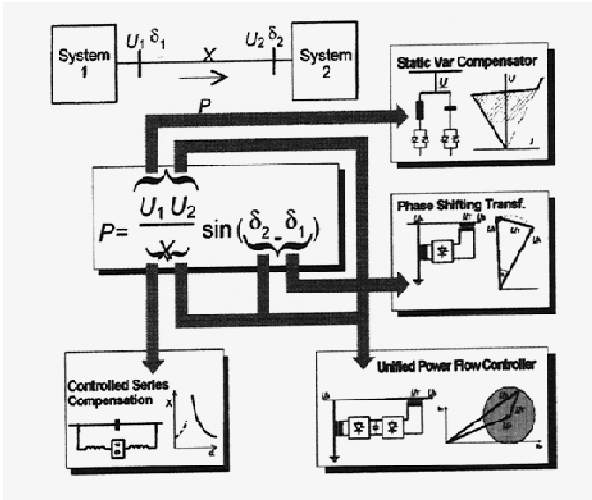

Fig. 1 Power flow control in AC power system

- Generation
- Transmission
- Distribution

Each transmission bottleneck or regional constraint may have one or more of these system-level problems. The key to solving these problems in the most cost-effective and coordinated manner is by thorough systems engineering analysis, The implementation of FACTS is primarily for dynamic issues[12].

The idea of designing FACTS is explained in Fig. 1 which shows a schematic diagram of an AC interconnection between two systems. The active power transmitted between the systems is defined by the given equation where and are the voltages at both ends of the transmission, is the equivalent impedance of the transmission, and - is the phase angle difference between both systems [13],].From the equation in Fig.1 it is evident that the transmitted power is influenced by three parameters: voltage, impedance, and voltage angle difference. FACTS devices can influence one or more of these parameters, as shown in the figure, and thereby influence power flow. They can be used for load flow control, voltage control and stability improvement in transmission systems as well as for additional special applications. The advantage of FACTS is that different new members of the FACTS family can be created by combining a variety of different equipments .

3. UPFC

Among all FACTS controllers, UPFC is the most comprehensive multifunctional FACTS device.. Unified power flow controller (UPFC) is one of the typical FACTS devices which can provide

simultaneous control of all parameters of power system (transmission voltage, line impedance and phase angle) and provide dynamic compensation to the power system. The UPFC can fulfill the functions of STATCOM, SSSC and phase shifter, and content multiple control objectives can be used for power flow control, loop-flow control, load sharing among parallel corridors, enhancement of transient stability, mitigation of system oscillations and voltage (reactive power) regulation[14] [15].

The UPFC consists of two voltage-source converters, which are connected back-to-back through a DC capacitor [Fig.3][15 It injects an AC series voltage into the transmission line and regulates the power flow by controlling the amplitude and phase of the injected voltage The series inverter is controlled to inject a set of synchronous voltages, V in series with the line In the process of doing this, the series inverter will exchange real and reactive power with the line The reactive power is electronically provided by the series inverter, and the real power is transmitted to the dc terminals The shunt inverter is operated in such a way as to demand this dc terminal power (positive or negative) from the line, thereby regulating the voltage of the dc bus The net real power absorbed from the line by the UPFC is thus equal to the losses of the two inverters and their transformers The remaining capacity of the shunt inverter can be used to exchange reactive current with the line,

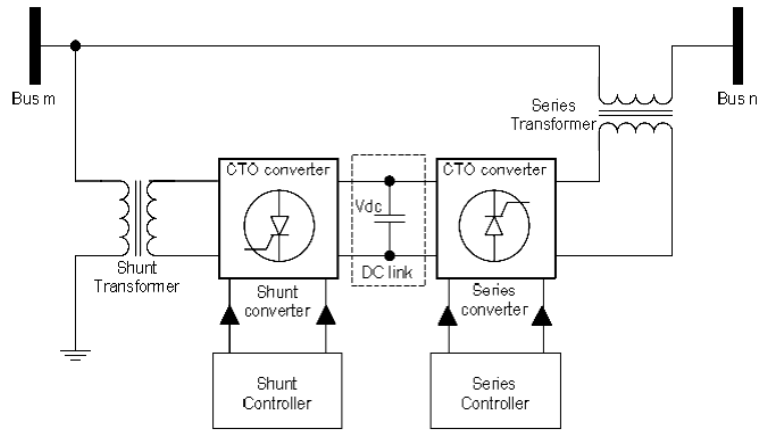

Fig. 2 The Configuration of general UPFC [16]

The shunt inverter is operated in such a way as to draw a controlled current from the line. One component of this current is automatically determined by the requirement to balance the real power of the series inverter. The remaining current component is reactive and can be set to any desired reference level (inductive or capacitive) within the capability of the inverter. The reactive compensation control modes of the shunt inverter are very similar to those commonly employed on conventional static VAR compensators [17], [18].

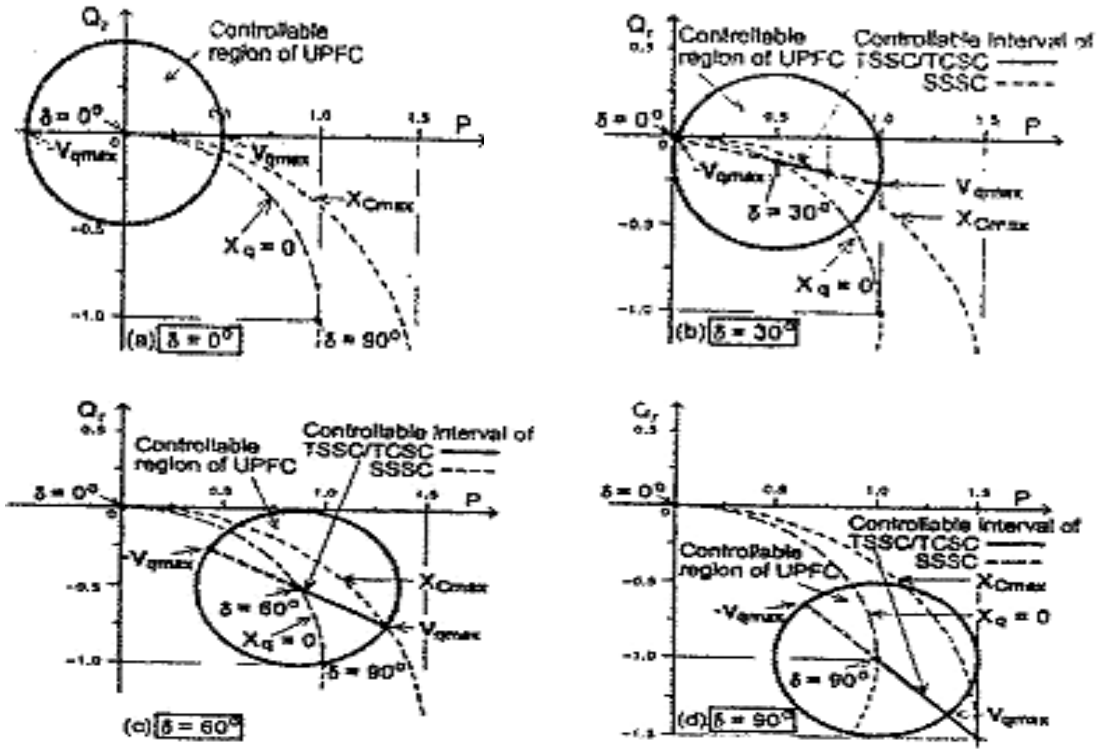

Fig 3 Attainable P and Q_r with series compensation (pts on heavy straight line inside the circle) and those with the UPFC (any pt inside the circle) at (a)δ = 0^0, (b)δ = 30^0, (c)δ = 60^0 and (d)δ =90^0

4. TECHNICAL BENEFITS OF FACTS CONTROLLERS

It is very necessary to specify here that these controllers facilitate the power systems with the controlling of most of the parameters. Contributed technical benefits are following [19][20][21].

- Power flow control
- Increment in the loadability of lines to their thermal, voltage and SSS limits.
- Increase the transient and dynamic stability, limiting short-circuit currents and overloads and hence making system more secure.
- Provide reactive power compensation
- Provide greater flexibility for new generation.

Here a list of FACTS controllers has been designed by incorporating these possible benefits, where one or more benefits may be overlapped by most of the controllers, as some of the parameters of power system are interlinked [30]. The measuring factors for various parameters like transient

stability, voltage stability .etc may be different for different controllers and this has been ignored here[22][23][24].

Sr no	FACTS controllers	Technical contribution
1	Static synchronous Compensator (STATCOM)	Voltage control VAR compensation Transient and dynamic Stability Voltage stability Damping oscillations
2	Static VAR Compensator (SVC,TSC,TCR)	Voltage control VAR compensation Transient and dynamic Stability Voltage stability Damping oscillations
3	Static synchronous series Compensator (SSSC)	current control Transient and dynamic Stability Voltage stability Damping oscillations
4	Thyristor Controlled series Compensator (TCSC/TSSC)	current control Transient and dynamic Stability Voltage stability Damping oscillations
5	Unified power flow controller (UPFC)	Active and reactive power control Voltage control VAR compensation Transient and dynamic Stability Voltage stability Damping oscillations
6	Interline power flow controller (IPFC)	Voltage control Reactive power control Transient and dynamic Stability Voltage stability Damping oscillations

5. INTEREST MEASURE FOR FACTS

A detailed literature survey has been done For this comprehensive review, and this search banks on the most important and common database, the IEEE electronic library. The survey spans over the last 25 years from 1988 to 2012. For this period a development model has been desgined and whole period has been divided into five sub-periods; 1988–1992, 1993–1997,1998- 2002,2003-2007 and 2008–2012. Each period has a lenghth of five years.In this article a extensive survey on research publications during these sub periods and conclude a vast development in research and implementation of UPFC controller. The number of publications discussing UPFC applications to different power system studies has been recorded. The results of the survey are shown in Fig. 4. It is conclude that the applications of UPFC controller to different power system studies have been drastically increased in last five years. This also shows more popularity for the VSC-based FACTS applications [26].The potential of UPFC controller to Improve the Transient Stability of Power Systems has been discussed by Eskandar Gholipour, Shahrokh Saadate. [27].whereas a extensive analysis of voltage stability of power system using UPFC was presented by Sandeep Gupta, R. K. Tripathi, and Rishabh Dev Shukla[28] and R. Natesan, G. Radman [29] Therefore several important points regarding UPFC have been analyzed and confirmed through this review.

6. CONCLUSIONS

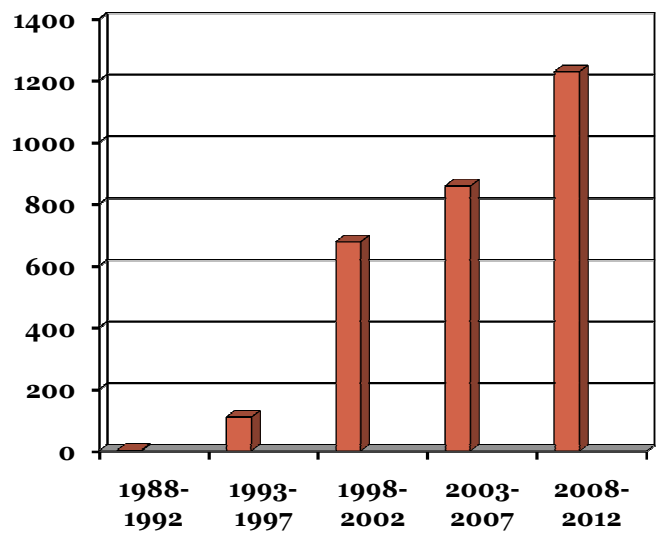

Fig 4. Publications on UPFC controller in different periods.

This exhaustive literature survey simply employs that the UPFC Devices are capable of solving one or all problems of the power system. The essential features of UPFC and their potential to improve

system stability is addressed. In recent years, along with the rapid increasing electric power requirement, the reconstruction of India's urban and rural power network is more and more urgent. With the history of more than three decades and widespread research in recent years, UPFC controllers has established itself as a proven and mature technology. Authors strongly believe that this survey article will be very much useful to the researchers for finding out the relevant references as well as the previous work done in the field of stabilization of power system and controlling its various parameters by using UPFC controllers in multi-machine power systems. So that further research work can be carried out. In this review, In the changing utility environment, UPFC is one of the most important tool for the operational flexibility and controllability in system operator. In view of the various power system contingencies, UPFC provides the most reliable and efficient solution.

The existing transmission network may use these UPFC controllers for better utilization. So This survey clearly indicates that there is a great potential for UPFC application in the years to come.

REFERENCES

[1] A. Sode-Yome, V. Pothiratana and N. Mithulananthan, "Roles of small power producers as part of peak serving scheme," invited paper, *Power-Gen Asia 2004*, Bangkok, Oct. 5-7, 2004.

[2] B. Gao, G.K. Morison, P. Kundur, "Towards the development of a systematic approach for voltage stability assessment of large-scale Power Systems," *IEEE Trans. Power Syst*.", Vol. 11, No. 3, pp. 1314-1324, Aug. 1996.

[3] P. Kundur, *Power System Stability and Control*. New York: McGraw-Hill, Inc., 1993.

[4] Eskandar Gholipour, Shahrokh Saadate. "Improving of Transient Stability of Power Systems Using UPFC", *IEEE Transactions On Power Delivery*, Vol. 20, No. 2, April 2005

[5] Abhishek Gandhar, Balwinder Singh, Rintu Khanna "*Impacts of FACTS technology-A state of Art Review*," *"International Journal of Innovative Technology and Exploring Engineering (IJITEE)",ISSN: 2278-3075, Volume-1, Issue-4, 28-31,September 2012.*

[6] 2. John J. Paserba, Fellow, IEEE, "How FACTS Controllers Benefit AC Transmission Systems" IEEE Transactions on Power Delivery,Vol, No 1 pages 949-957,2003.

[7] R. Natesan, G. Radman." Effects of STATCOM, SSSC and UPFC on Voltage Stability". *IEEE Spectrum 2004*

[8] N.G. Hingorani, L. Gyugyi, *Understanding FACTS, Concepts and Technology of Flexible AC Transmission systems*, IEEE Press 2000

[9] N. G. Hingorani, "FACTS-Flexible AC Transmission System,"*Proceedings of 5th International Conference on AC and DC PowerTransmission-IEEE Conference* Publication, 1991, pp. 1-7.

[10] L. Gyugyi, "A unified power flow control concept for flexible ac transmission systems," *ZEE Proceedings-C*, vol. 139, no. 4, July 1992, pp. 323-331.

*[11]*Abhishek Gandhar, Balwinder Singh, Rintu Khanna "Power congestion Relief using UPFC," "International Journal of *Electronic and Electrical Engineering ",ISSN: 0974-2174, Volume-5, Issue-1, 2012*

*[12]*N.G. Hingorani, "Introducing Custom Power," *IEEE Spectrum*, June 1995

[13] W. Breuer, D. Povh, D. Retzmann, E. Teltsch, "Role of HVDC and FACTS in Future Power Systems", *Shanghai Power Conference, CEPSI- 2004*, Shanghai

[14] S. Y. Kim, B. Y. Kim, J. S. Yoon, B. H. Chang, and D. H. Baek, "The operation experience of KEPCO UPFC," *Electrical Machines and Systems 2005*, pp. 1–6, ICEMS.

[15] L. Gyugyi, "A unified flow control concept for flexible AC transmission systems," *AC and DC Power Transmission 1991, International Conference* on, pp. 19 -26,1991

[16] L. Gyugyi, "A unified power flow control concept for flexible ac transmission systems," *ZEE Proceedings-C*, vol. 139, no. 4, July 1992, pp. 323-331.

[17] I. Papic, P. Zunko, D. Povh and W. Weinhold, "Basic control of unified power flow controller", *IEEE Trans. on PS*, Vol. 12, No. 4, pp 1734-1739, 1997

[18] Avramović B., Fink L., "Energy management systems and control of FACTS," *Electrical Power & Energy Systems*, vol. 17, no. 3, June 1995,pp. 195-198

[19] Edris A., "FACTS technology development: an update," *IEEE PowerEngineering Review*, vol. 20, no. 3, March 2000, pp. 4-9

[20]Abhishek Gandhar, Priyanka Vashisht,Anupam Joshi,Prince "An Approach By PST-OLTC For The Enhancement Of Power Regulation" International Journal of Advanced Research in Electrical,Electronics and Instrumentation Engineering (IJAREEIE)",ISSN: 2278-8875, Volume-2, Issue-6, june 2013

[21] *Abhishek Gandhar, Balwinder Singh, Rintu Khanna "Comparative Performance Of UPFC and PST-OLTC" Proceedings of 6th International Academic Conference on Electrical,Electronics and Computer Engineering (IACEECE)*, oct,2013, pp. 30-34.

[22] Caldon R., Mari A., Paolucci A., Turri R., "An efficient modular model for static and dynamic analysis of FACTS performances on electric power systems," *Proceedings of the IEEE Power Tech'99 Conference -BPT'99*, Budapest, Hungary, August 1999, paper BPT99-138-44

[23] Pilotto L., Ping W., Carvalho A., Wey A., Long W., Alvarado F., Edris A., "Determination of needed FACTS controllers that increase asset utilization of power systems," *IEEE Trans. Power Delivery*, vol. 12, no.1, January 1997, pp. 364-371

*[24]*Mihalič R., Povh D., Žunko P., "Increased loadability of long transmission lines by insertion of FACTS devices," *Electrotechnical Review*, Ljubljana, Slovenia, vol. 60, no. 1, 1993, pp. 7-12 (in Slovenian)

[25] N. Mithulananthan, C. Canizares, J. Roeeve, and G. Rogers,"Comparison of PSS, SVC, and STATCOM for Damping Power System Oscillations," *IEEE Trans. On Power Systems*, Vol. 18, No. 2, May 2003.

[26] S.M. Bamasak and M. A Abido, "Assessment Study Of Shunt Facts-Based Controllers Effectiveness On Power System Stability Enhancement," *39th UPEC Proceedings*, Vol. 1, pp 65-71, Sept 2004.

[27] Eskandar Gholipour, Shahrokh Saadate. "Improving of Transient Stability of Power Systems Using UPFC", *IEEE Transactions On Power Delivery*, Vol. 20, No. 2, April 2005

[28] Sandeep Gupta, R. K. Tripathi, and Rishabh Dev Shukla," Voltage Stability Improvement in Power Systems using Facts Controllers: State-of-the-Art Review," *IEEE Trans. On Power Systems*, 2010

*[29]*R. Natesan, G. Radman." Effects of STATCOM, SSSC and UPFC on Voltage Stability". *IEEE Spectrum 2004*